PRODUCT DATASHEET

SATTE SHLP 20

Horizontal Multistage Pump

SATTE SHLP 20

PERFORMANCE CHART AT n=2900 RPM

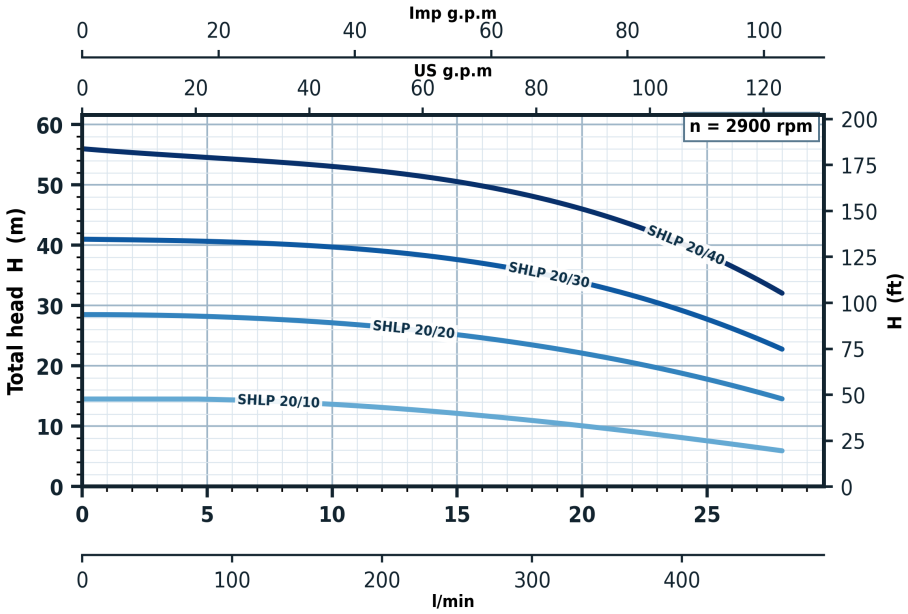

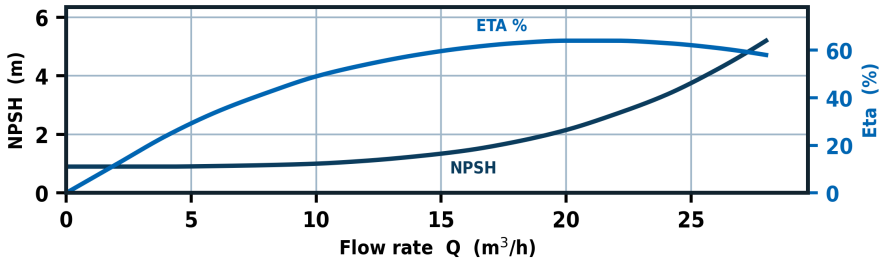

Curves show the published flow range for each model. Clean water at 20 C, tolerances to ISO 9906 Annex A.

Typical Applications

- Air-conditioning and cooling systems: circulation for consistent temperature control and machine cooling.
- Pressure boosting in industrial processes and for domestic and commercial water distribution.
- Water treatment and purification plant, and boiler feedwater at high pressure.
- Industrial cleaning and high-pressure washdown duties.
- Aquaculture, fertiliser metering and agricultural irrigation.
- Firefighting systems requiring rapid, reliable supply.

Operating Conditions

- Thin, clean, non-aggressive and non-explosive liquids without solid particles or fibres.
- Liquid temperature range 0 C to +90 C; maximum ambient temperature +50 C.
- Maximum inlet pressure 6 bar; maximum operating pressure 10 bar to 40 C, 6 bar to 90 C.
- Maximum suction lift: read from the NPSH curve, plus a safety margin of 1.0 m.
- Enclosure class IP54, insulation class F, 2900 rpm.
- All models in this series share the 20 m3/h hydraulic; the figure after the oblique is the stage group.
- Non-self-priming; fill the casing and suction line before starting.

PRODUCT DATASHEET

SATTE SHLP 20

Horizontal Multistage Pump

Materials of Construction

- **Pump body:** Stainless steel AISI 304
- **Motor housing:** Aluminium
- **Motor shaft:** Stainless steel AISI 431
- **Pump support:** Cast iron
- **Impeller:** Stainless steel AISI 304
- **Mechanical seal:** Ceramic / graphite

Technical Data

	Motor		Voltage	Current (A)		m	m3/h		Inch	kg	mm
Model	kW	HP	Supply	In	Ist	Max H	Max Q	rpm	DN	Weight	L x W x H
SHLP 20/10	1.1	1.47	1~ 220-240 V	8.9	40	14.5	28	2900	G1 1/2	34	620x230x290
SHLP 20/20	2.2	2.95	1~ 220-240 V	17.7	80	28.5	28	2900	G1 1/2	34	620x230x290
SHLP 20/30	4.0	5.36	1~ 220-240 V	32.2	145	41.0	28	2900	G1 1/2	34	620x230x290
SHLP 20/40	4.4	5.9	1~ 220-240 V	35.4	159	56.0	28	2900	G1 1/2	34	620x230x290

Head-flow data is the published performance of the series, tested on clean water at 20 C at 2900 rpm. Tolerances to ISO 9906 Annex A. Maximum head is the head at zero flow; maximum flow is the highest published flow for the model.

SUCTION CONDITIONS: this is a surface-mounted series operating on suction lift. The achievable lift falls as liquid temperature and site altitude increase. At approximately 1,200 m altitude, atmospheric pressure is about 12% below sea level, reducing achievable suction lift by roughly 1.2 m. Keep the suction line short, airtight and fully flooded.

Currents are calculated nominal values for a two-pole motor (single phase at 230 V, three phase at 400 V). In is the full-load running current and Ist the direct-on-line starting current. Confirm against the motor nameplate before sizing cable, starter or overload.

Select the duty point within the published flow range. Operating far to the right of the range overloads the motor; operating far to the left causes heat build-up in the pump.

Dimensions are pump overall length x width x height in millimetres, as published for the series. Net weight is for the pump with standard motor and cable. Currents shown are the published full-load values where available.

Performance Table

Total head H (m) against flow rate Q (m3/h) at 2900 rpm, on clean water at 20 C. Motor power P2 is the standard motor rating for each model.

Motor			Q (m3/h)										
Model	kW	HP	0	10	12	14	16	18	20	22	24	26	28
SHLP 20/10	1.1	1.47	14.5	13.5	13.0	12.5	12.0	11.0	10.0	9.0	8.0	7.0	6.0
SHLP 20/20	2.2	2.95	28.5	27.0	26.5	25.5	25.0	23.5	22.0	20.5	18.5	17.0	14.5
SHLP 20/30	4.0	5.36	41.0	39.5	39.0	38.0	37.5	35.5	34.0	31.5	29.0	26.0	23.0
SHLP 20/40	4.4	5.9	56.0	53.0	52.0	51.0	50.0	48.5	46.5	43.0	40.0	36.0	32.5

Blank cells indicate flows outside the published range for that model.
Solids handling: Not suitable for solids-bearing liquids. Discharge connection: G1 1/2.

Dimensions

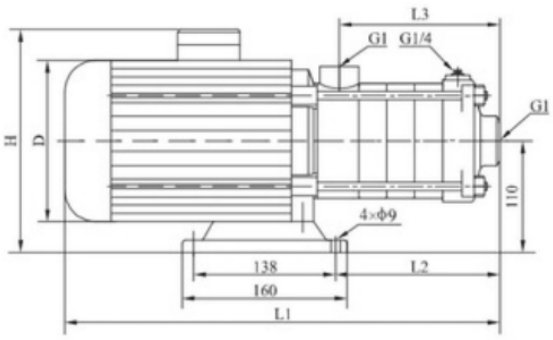

L overall length
W overall width
H overall height

Dimensioned outline for the series. Per-model overall dimensions are tabulated above. Certified drawings are available on request for final design.